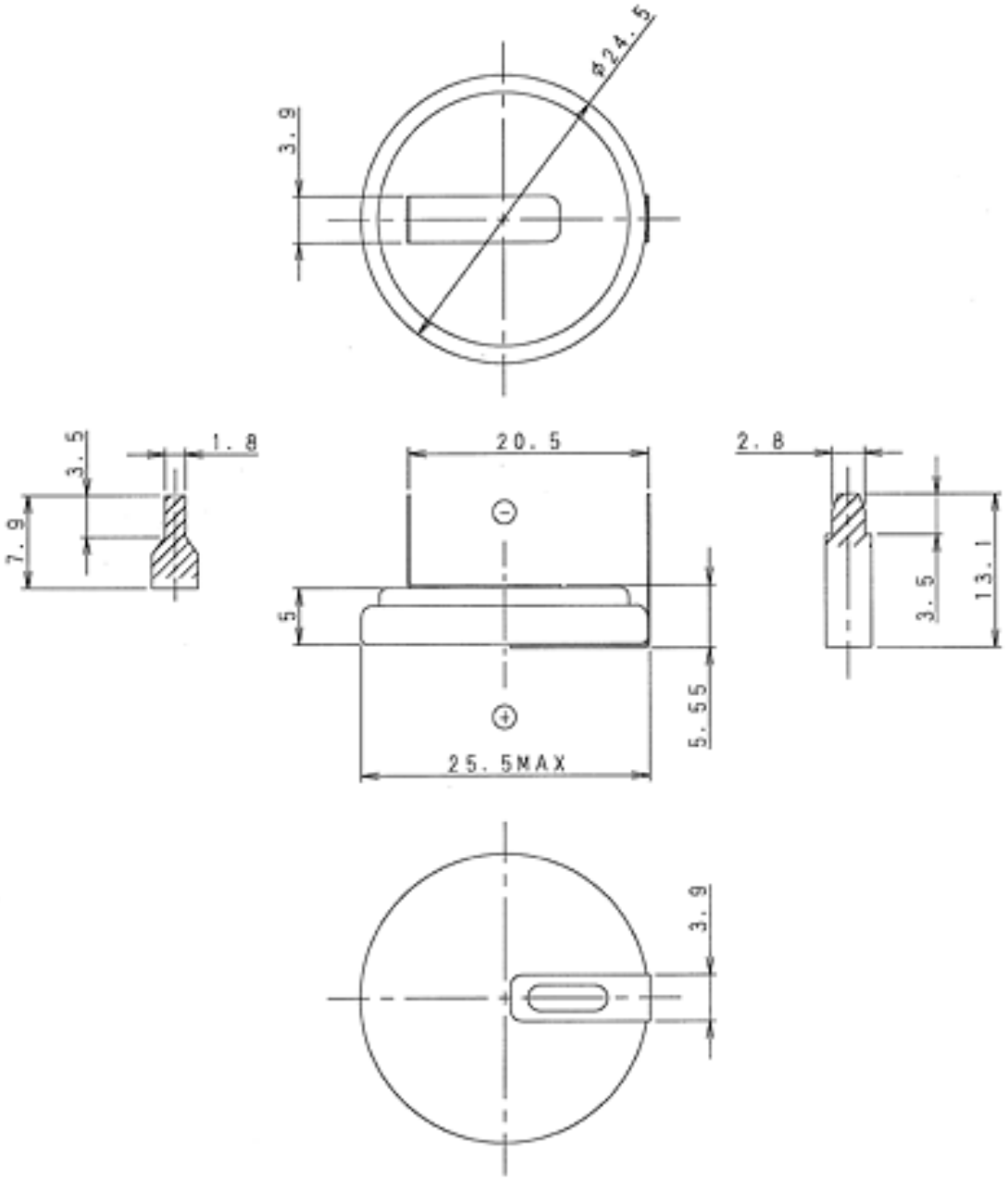
φ24.5
3.9
3.5
1.8
7.9
20.5
2.8
5
5.55
25.5MAX
3.5
13.1
3.9