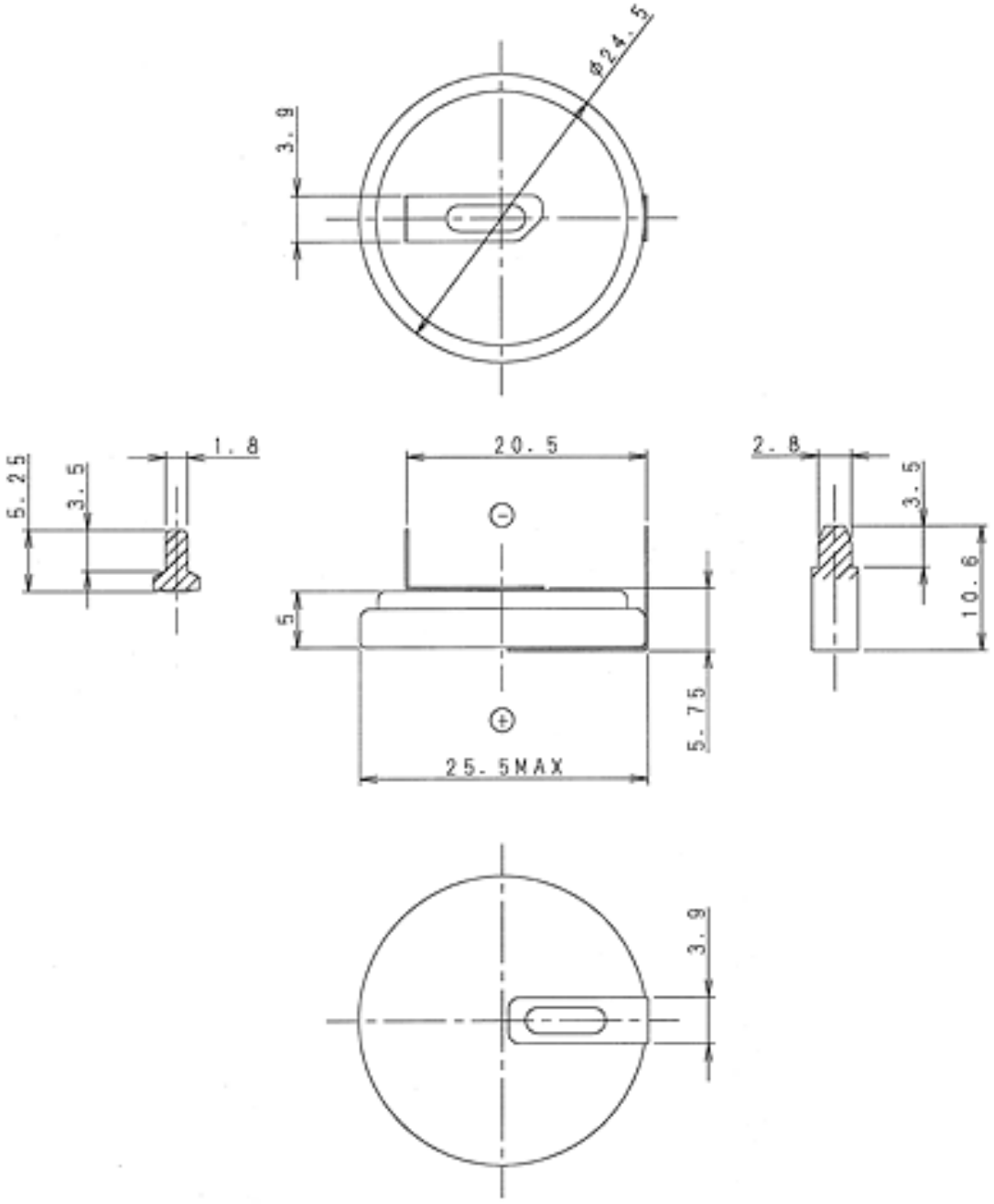
φ24.5
3.9
1.8
5.25
3.5
20.5
2.8
3.5
10.6
5
5.75
25.5MAX
3.9