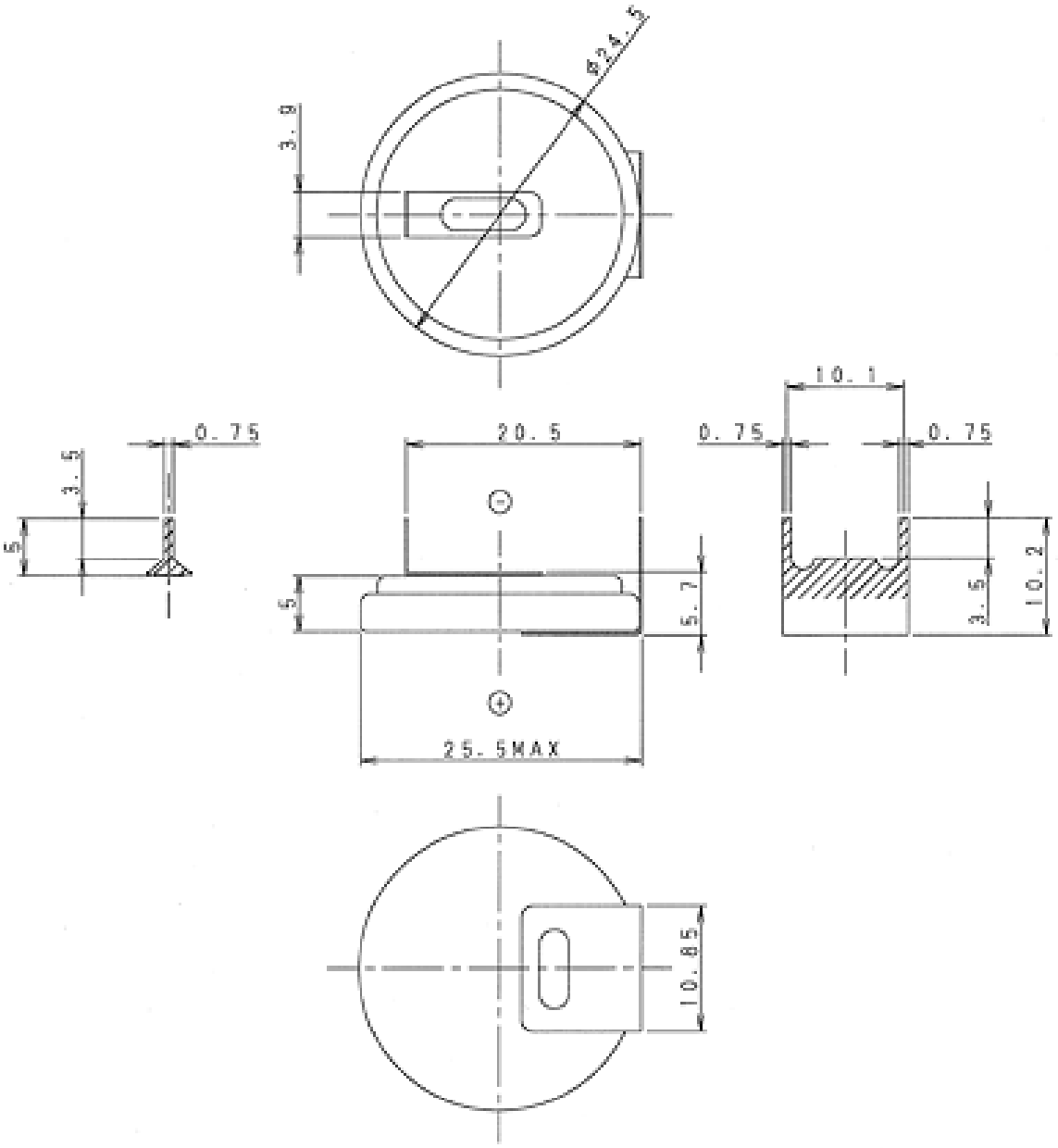

Ø24.5
3.9
0.75
3.5
5
20.5
5
5.7
25.5MAX
10.1
0.75
0.75
3.5
10.2
10.85