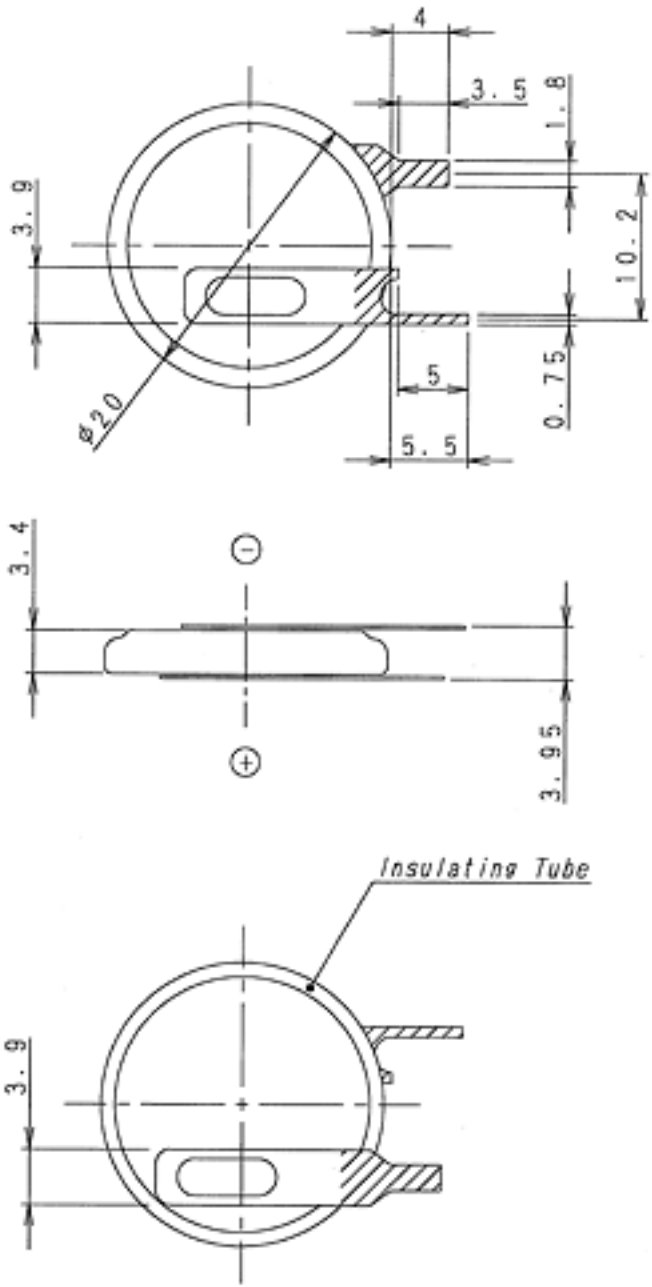
4
3.5
1.8
3.9
10.2
0.75
5
5.5
φ20
3.4
3.95
Insulating Tube
3.9