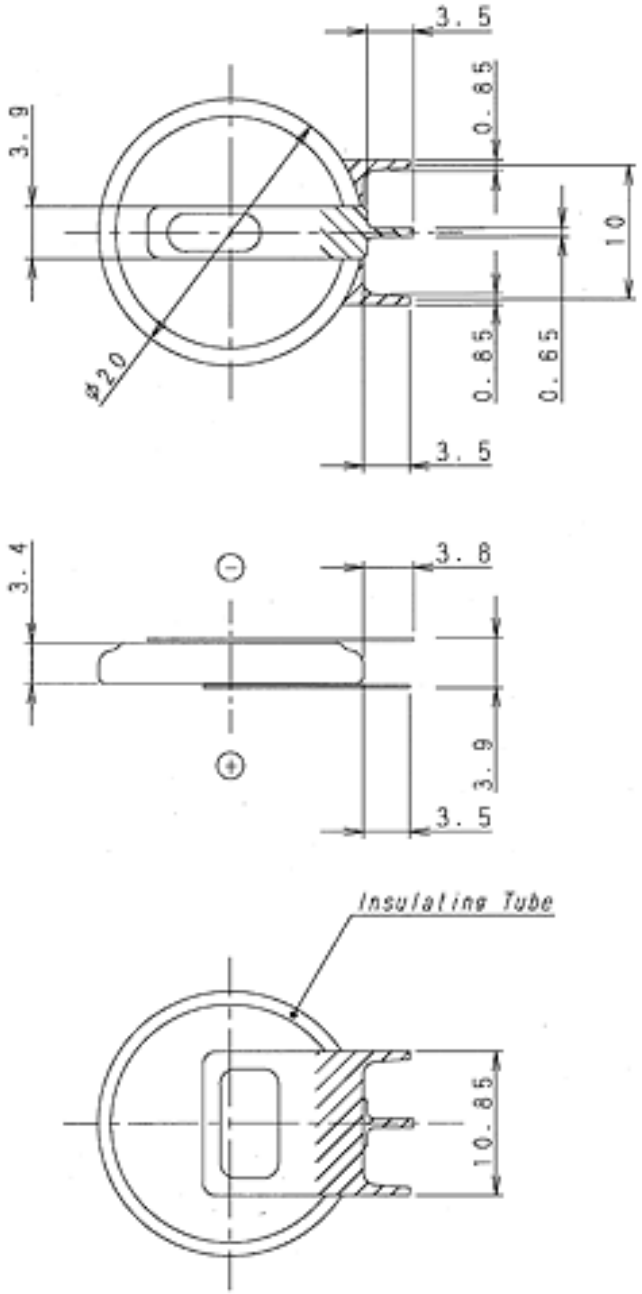
3.5
0.85
3.9
10
φ20
0.85
0.65
3.5
3.4
3.8
3.9
3.5
Insulating Tube
10.85