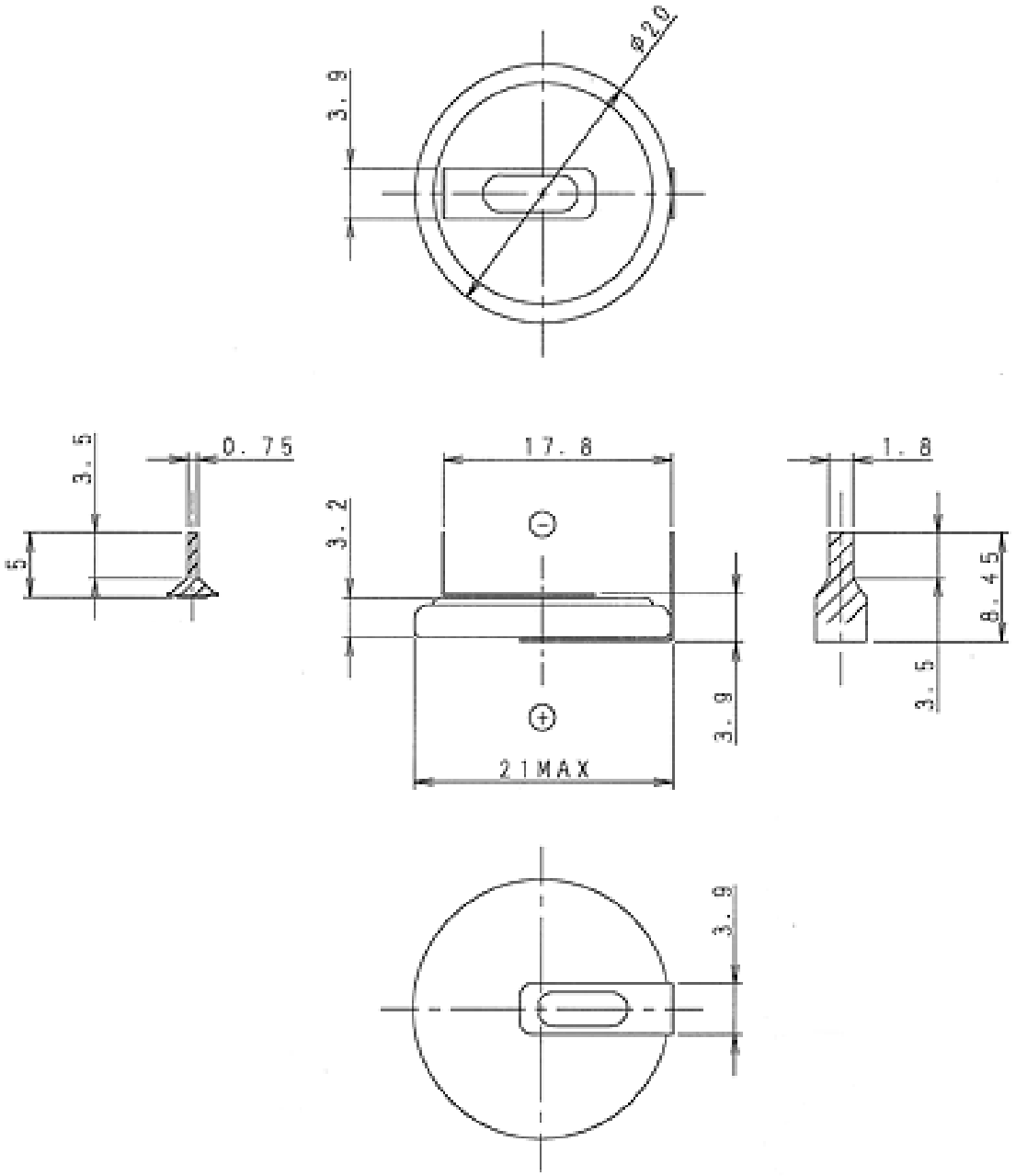
3.9
φ20
3.5
0.75
5
17.8
3.2
3.9
21MAX
1.8
8.45
3.5
3.9