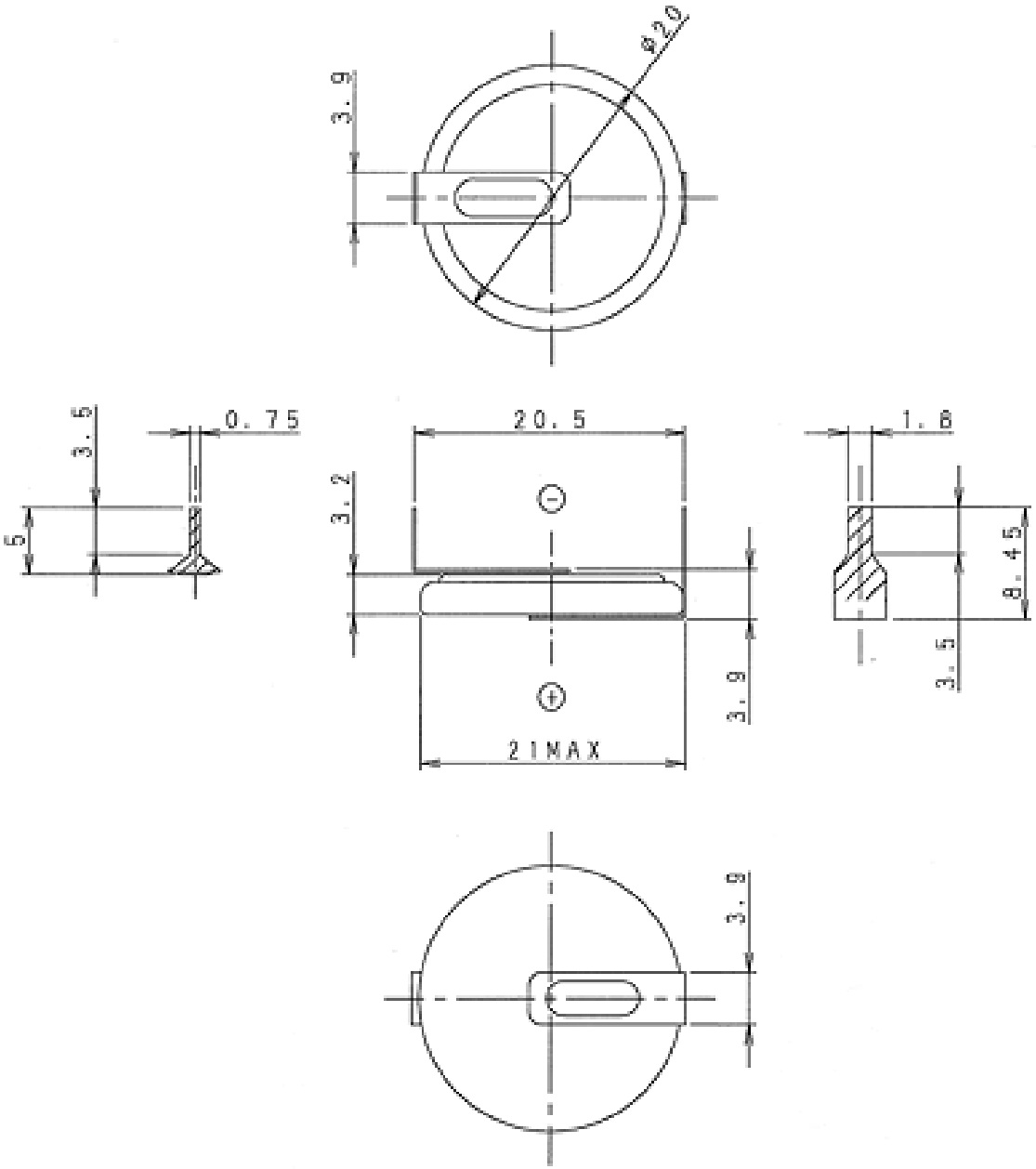
3.5
5
0.75
3.2
20.5
21MAX
3.9
3.9
φ20
1.8
8.45
3.5