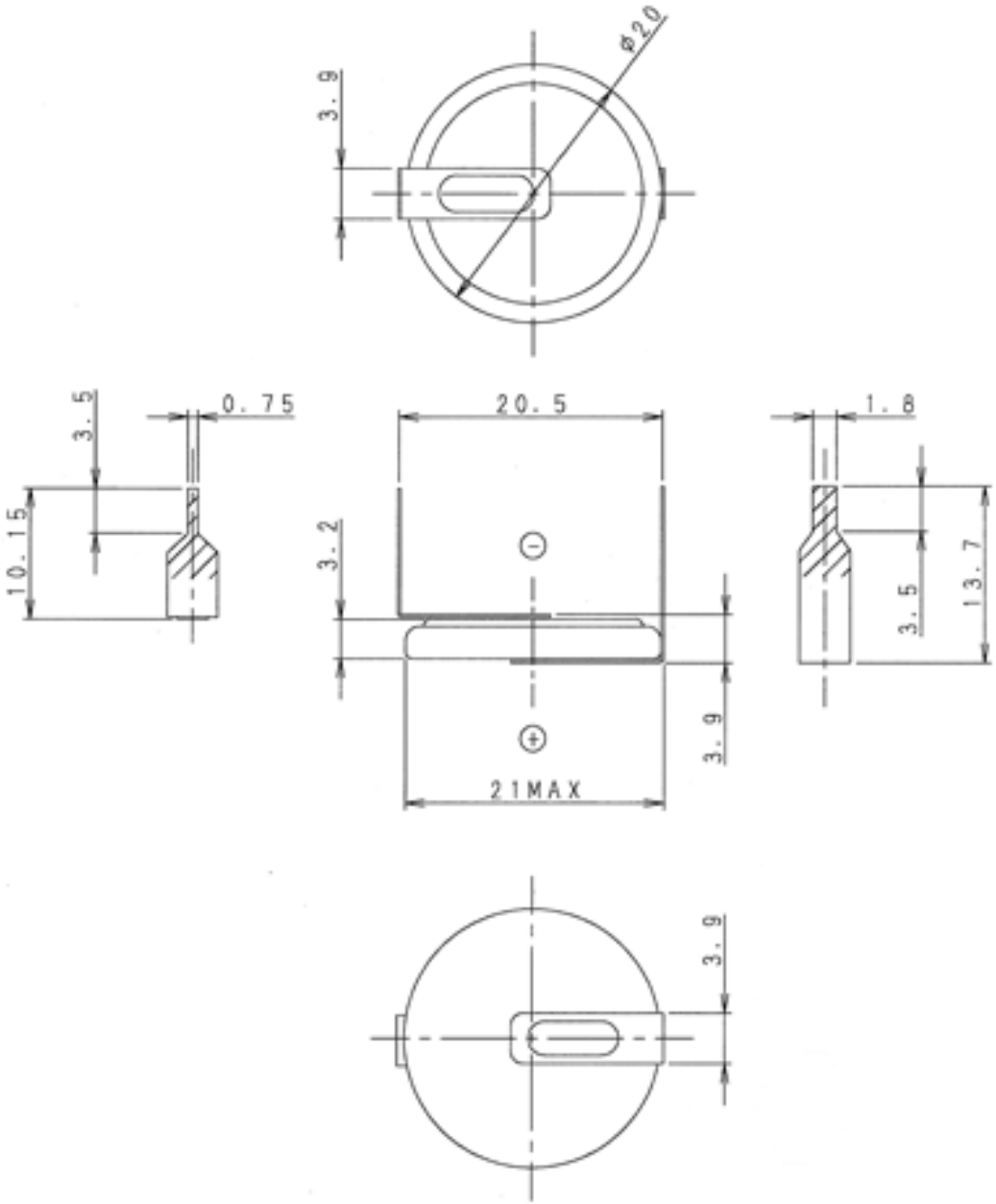
3.9
3.5
10.15
0.75
3.2
20.5
21MAX
3.9
1.8
3.5
13.7
3.9
φ20