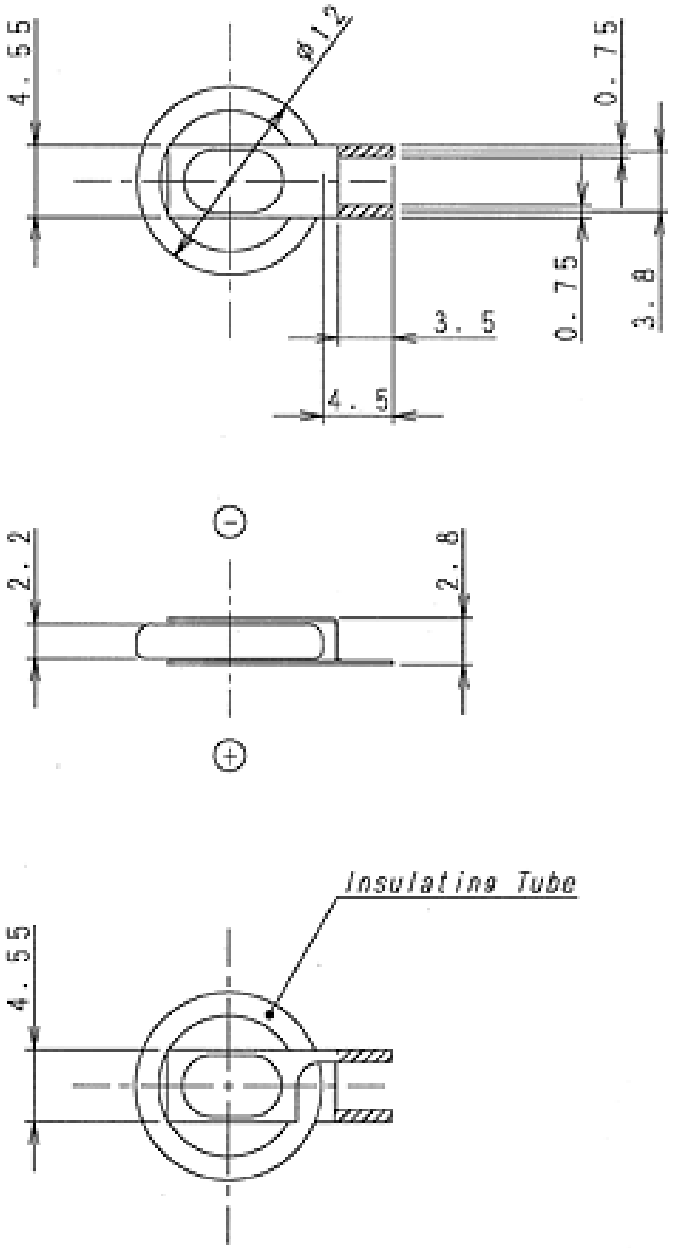
4.55
ø12
0.75
0.75
3.8
3.5
4.5
2.2
2.8
Insulating Tube
4.55